21-5632-01
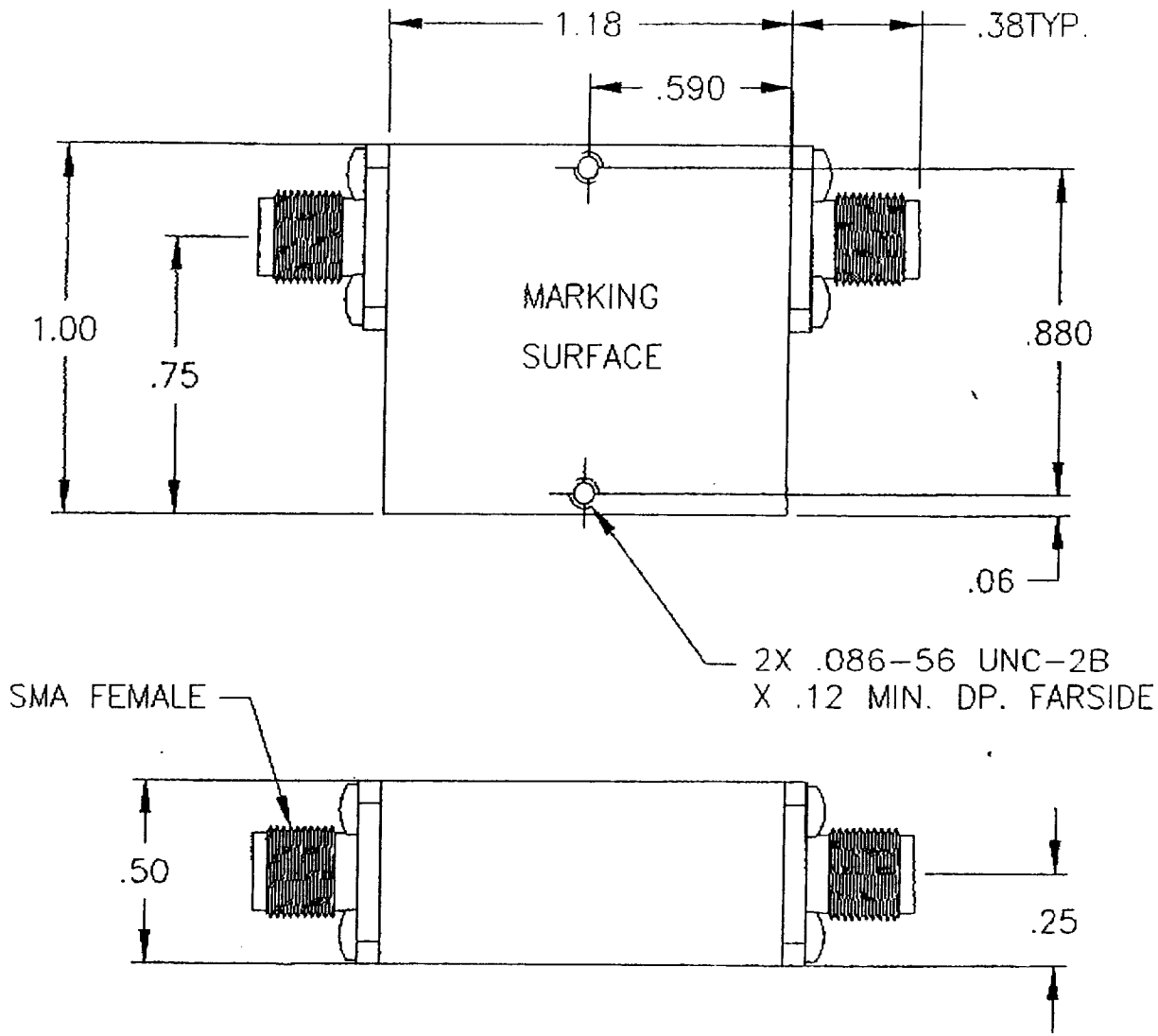
ZONE	REV.	DESCRIPTION	DATE(YR-MO-DY)	APPROVED